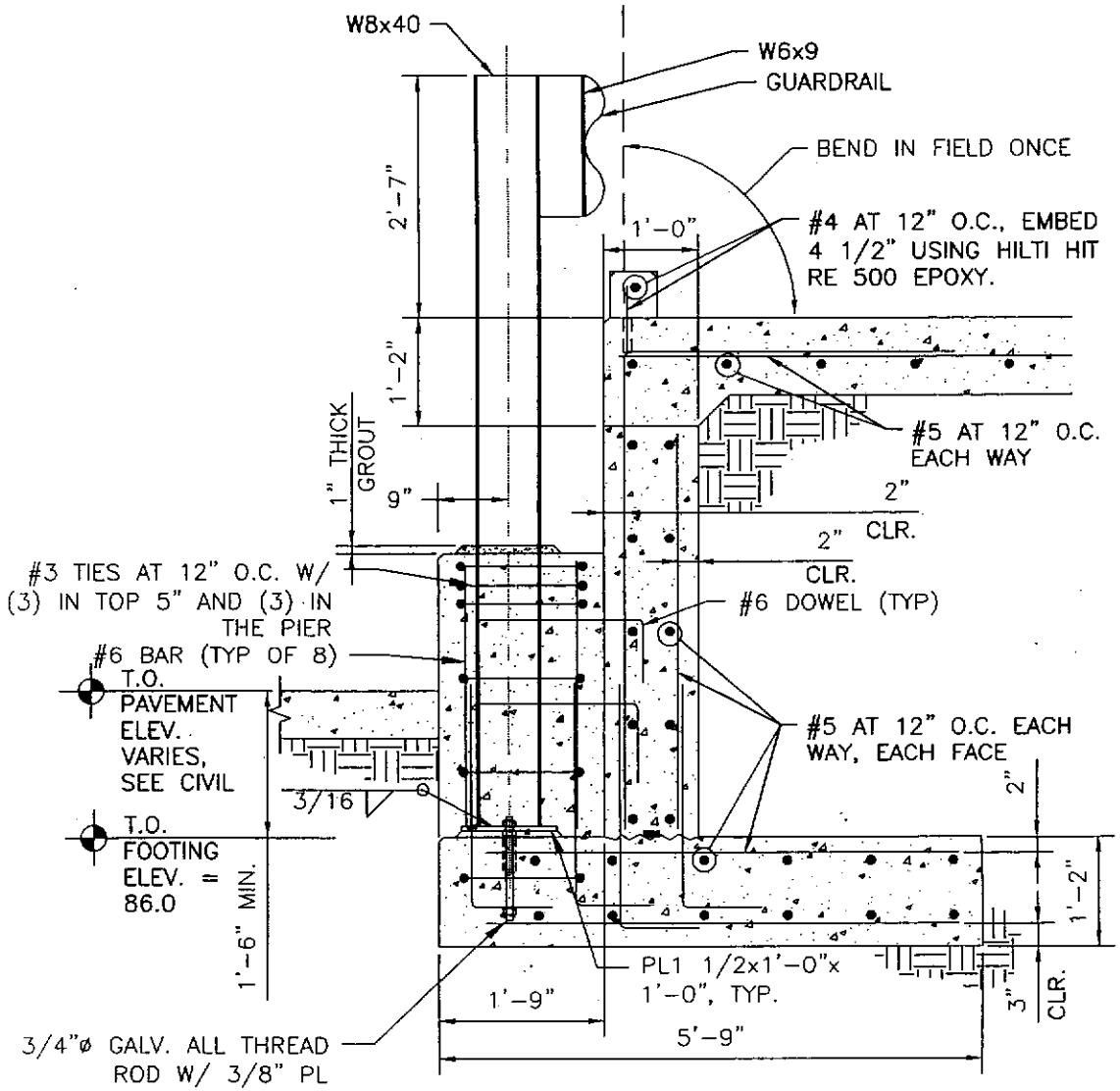

SECTION D J8S623
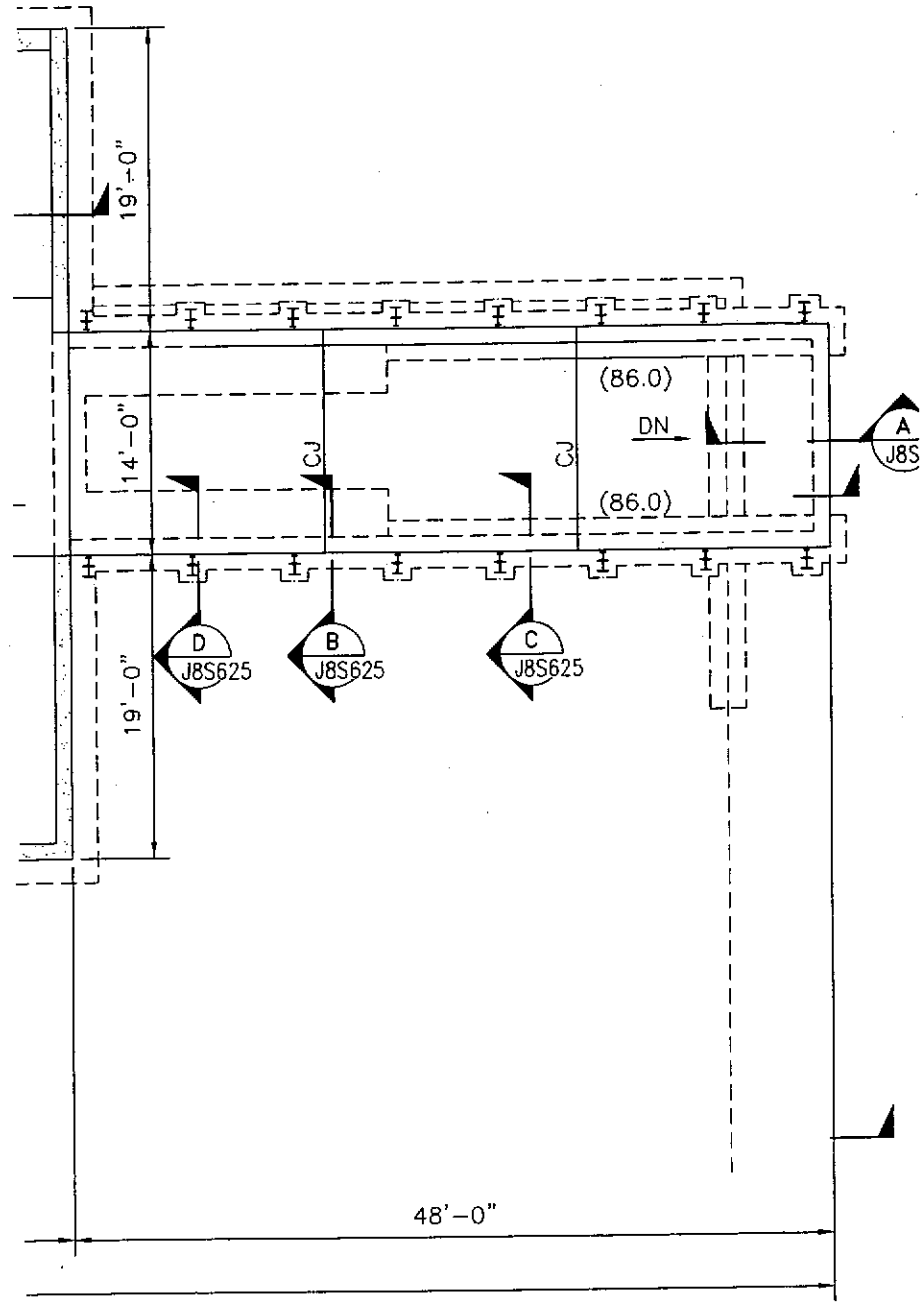
SCALE: 3/4" = 1'-0"