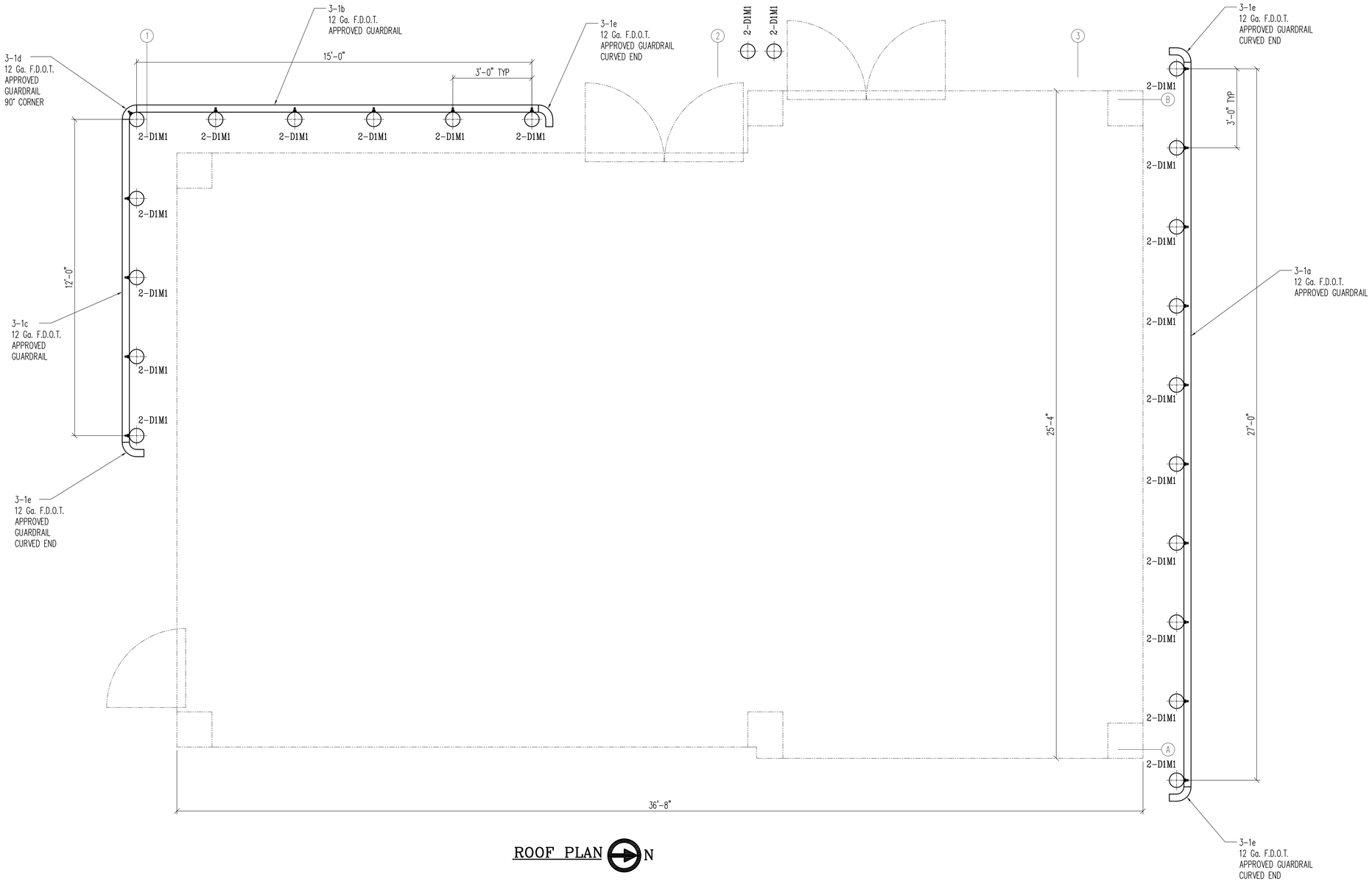
3-1b
12 Ga. F.D.O.T.
APPROVED GUARDRAIL
3-1d
12 Ga. F.D.O.T.
APPROVED
GUARDRAIL
90° CORNER
15'-0"
3'-0" TYP
3-1e
12 Ga. F.D.O.T.
APPROVED GUARDRAIL
CURVED END
2-D1M1
12'-0"
3-1c
12 Ga. F.D.O.T.
APPROVED
GUARDRAIL
3-1e
12 Ga. F.D.O.T.
APPROVED
GUARDRAIL
CURVED END
25'-4"
27'-0"
3-1a
12 Ga. F.D.O.T.
APPROVED GUARDRAIL
36'-8"
3-1e
12 Ga. F.D.O.T.
APPROVED GUARDRAIL
CURVED END
ROOF PLAN
N

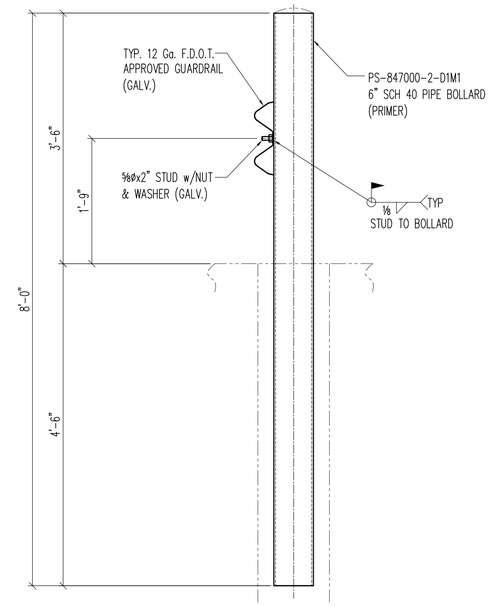
TYP. 12 Ga. F.D.O.T.
APPROVED GUARDRAIL
(GALV.)
PS-847000-2-D1M1
6" SCH 40 PIPE BOLLARD
(PRIMER)
⅝"x2" STUD w/NUT
& WASHER (GALV.)
⅛ TYP
STUD TO BOLLARD
3'-6"
1'-9"
8'-0"
4'-6"